TADANO

TECHNICAL DATA | IMPERIAL

GR-550XL

55 US TON MAX. CRANE CAPACITY

TADANO GREEN SOLUTIONS

- Suitable for alternative fuels

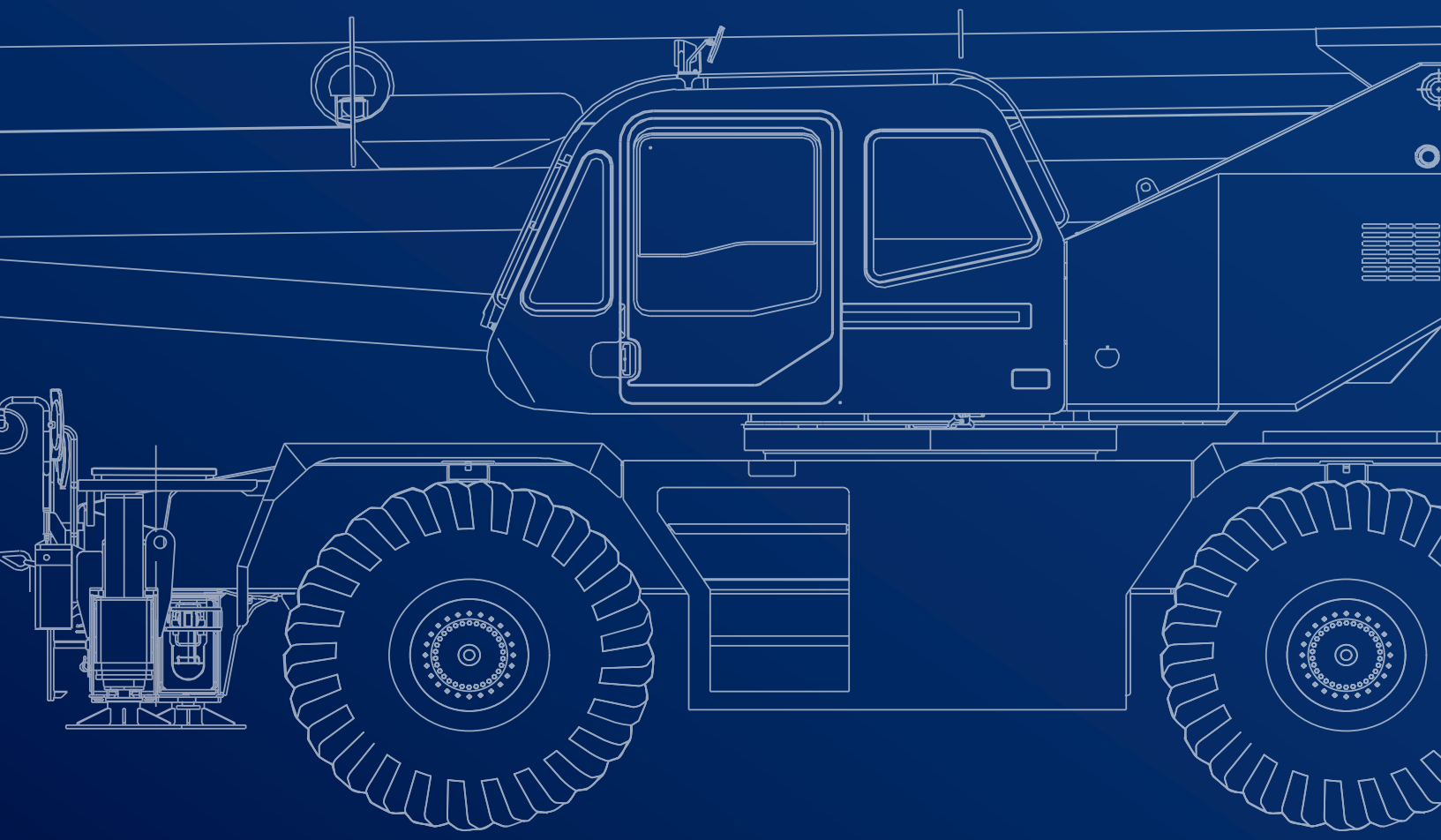

TADANO

February 2025. Unless otherwise specified, all information in this brochure refers to a standard crane equipment, and it is intended as general information only. No liability is assumed. Errors reserved. Product specifications and prices are subject to changes without notice. The photographs and/or drawings in this brochure are for illustrative purposes only. For correct and safe crane operation, the original operating manual and lifting capacity charts are essential. Failure to follow the corresponding Operator's Manual when using our equipment or failure to otherwise act responsibly may result in property damage, serious injury or death. The sole warranty applicable with respect to our equipment is the standard warranty as per general terms and conditions of sales and service (ask your local Tadano dealer for details), and Tadano makes no other warranty, express or implied. All rights reserved. Any use of the trademarks, logos, brand names and model names used herein is prohibited.

© Tadano Ltd. 2025

Contents

Specifications 5

Vehicle dimensions 6-7
General dimensions 7

Off-road driving 9

Axle weight distribution chart 10
Speeds and gradeability 10
Steering 10

Operation 11

Main boom 12
Slewing 12
Hoist 12
Line speeds and pulls 13
Drum wire rope capacities 13
Drum dimensions 13
MB: Main boom 14-18
FJ: Folding swing-away jib 20-22
Notes to Lifting Capacity 23
Warning and Operating Instructions for on Rubber Lifting Capacities 24
Notes for Load Moment Indicator (AML-C) 24

Technical Description 25

Crane specifications 26-27
Carrier specifications 27
Standard equipment 28-29

Key

Counterweight

Lifting capacities on outriggers · 360°

Radius

Main boom

Main boom length

Folding swing-away jib

Tires

Hook block

Hook ball

Hoist

Travel speed

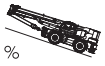

Gradeability

Working speeds

Rope

Base jib

Top jib

Boom telescoping

Boom elevation

Slewing

Max. line pull

Rope diameter

Rope length

Hook block

Number of lines

Number of sheaves in hook block

Line pulls available

Possible load of hook block

Weight of hook block

Distance head sheave axle – hook ground

Max. outrigger load

Length of stroke (support cylinders)

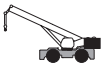
Base machine

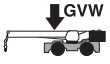

Gross vehicle weight

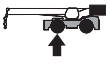
Weight on front axle

Weight on rear axle

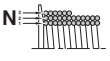

Wire rope layer

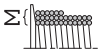

Total wire rope

SPECIFICATIONS

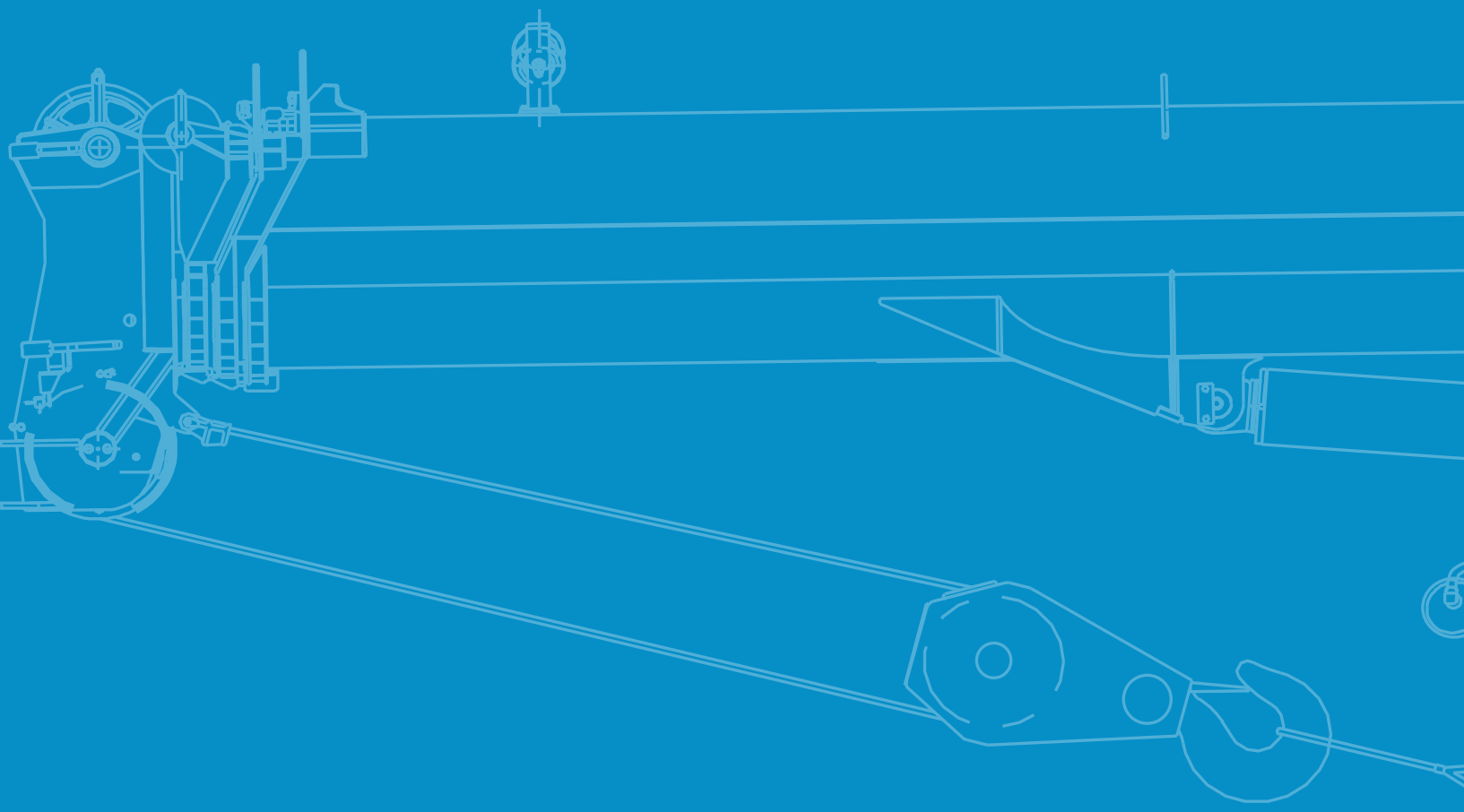

Specifications

Vehicle dimensions

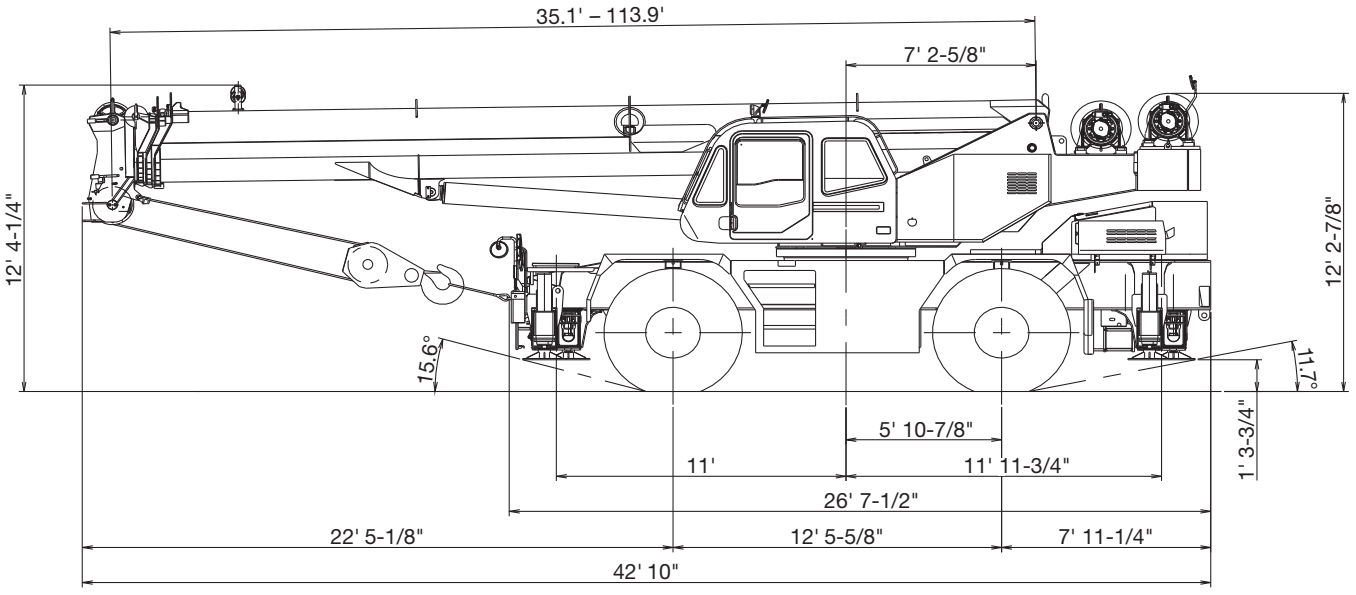

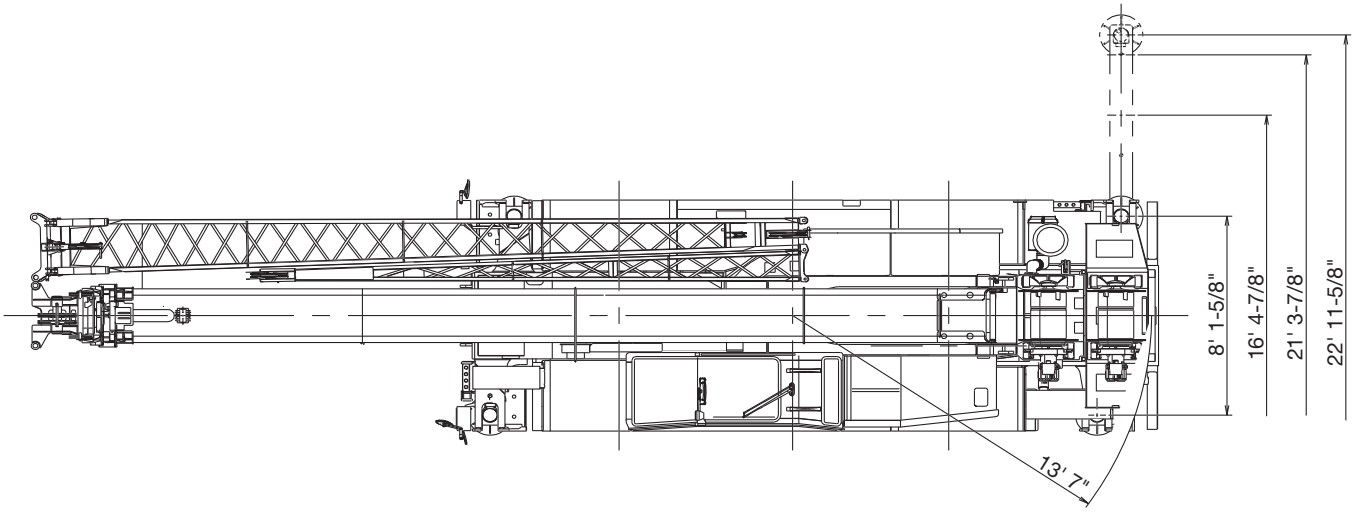

Dimension is with boom angle at -0.8 degree.

Specifications

Vehicle dimensions

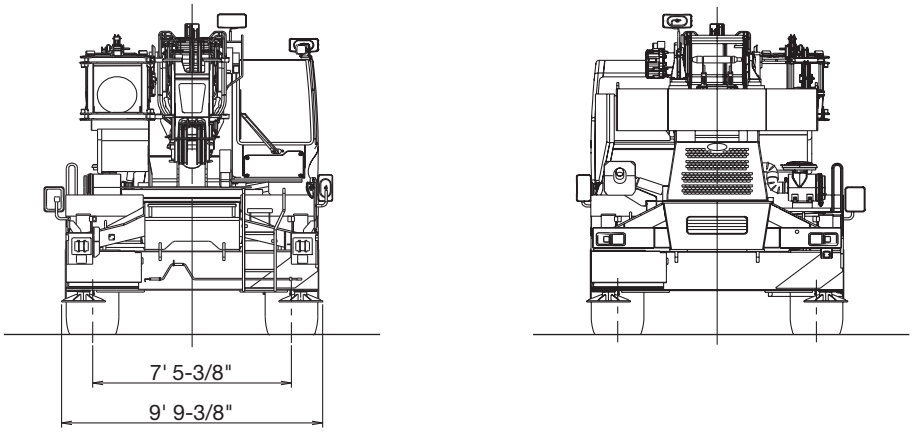

General dimensions

Overall length	approx. 42‘ 10“
Overall width	approx. 9‘ 9-3/8“
Overall height	approx. 12‘ 4-1/4“
Turning radius: 4 wheel steer*	22‘
Turning radius: 2 wheel steer*	38‘ 5“
Tail swing of counterweight*	13‘ 7“

* 23.5-25 tires

Notes

TECHNICAL DATA FOR OFF-ROAD DRIVING

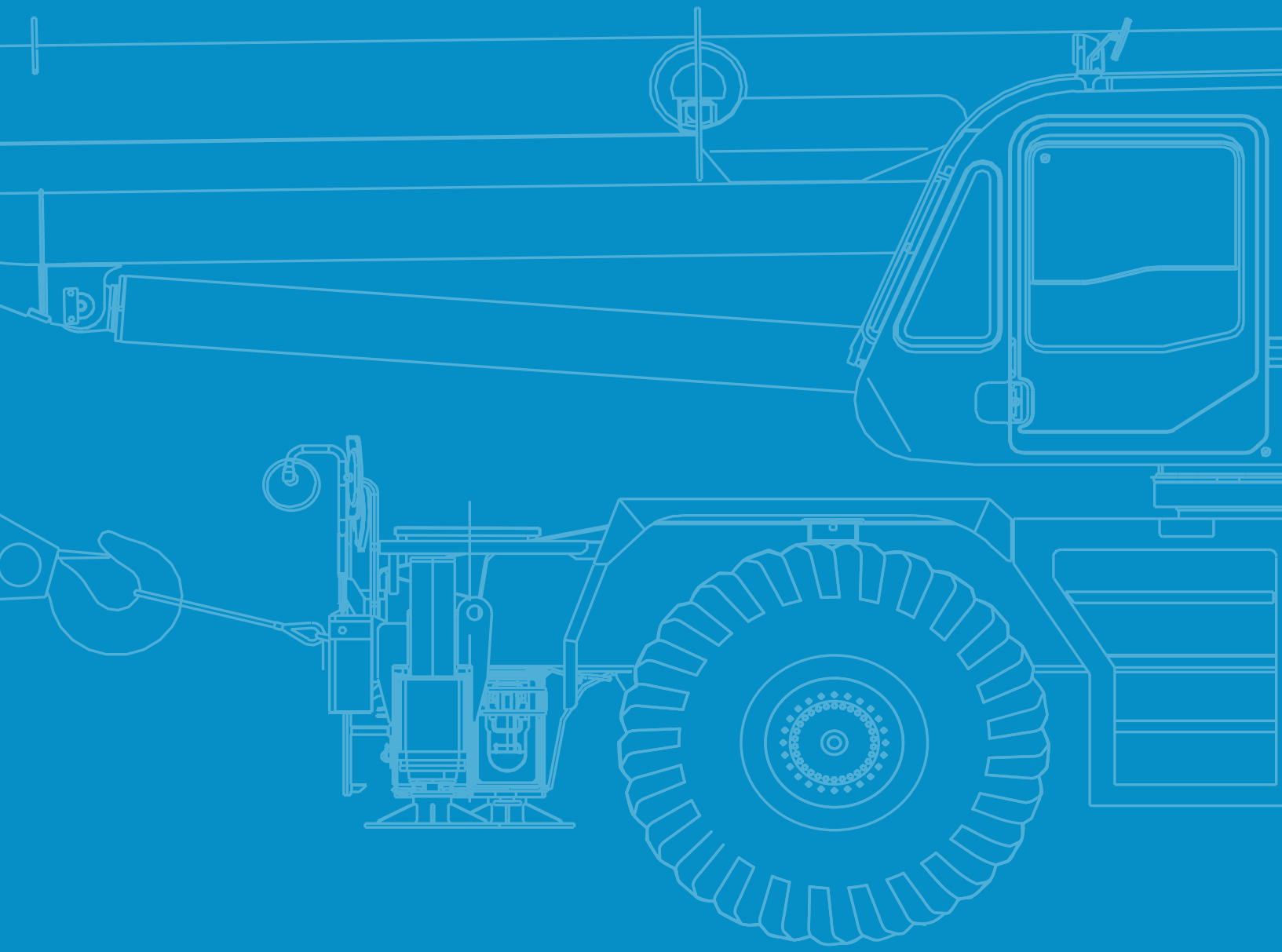

Off-road driving

Axle weight distribution chart

	GVW		
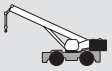	74,850 lb	38,500 lb	36,350 lb
Remove:			
6.2 ton	-330 lb	-460 lb	130 lb
55 ton	-1,180 lb	-2,160 lb	980 lb
Top jib	-500 lb	-630 lb	130 lb
Base jib	-1,380 lb	-2,510 lb	1,130 lb
Auxiliary lifting sheave	-110 lb	-300 lb	190 lb

Speeds and gradeability

	23.5-25 (OR)
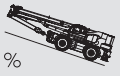 %	69 % at stall 57 % Machine should be operated within the limit of engine design (30˚: Cummins B6.7)
	31 mph

Steering

	4 wheel steer
	2 wheel steer

TECHNICAL DATA FOR OPERATION

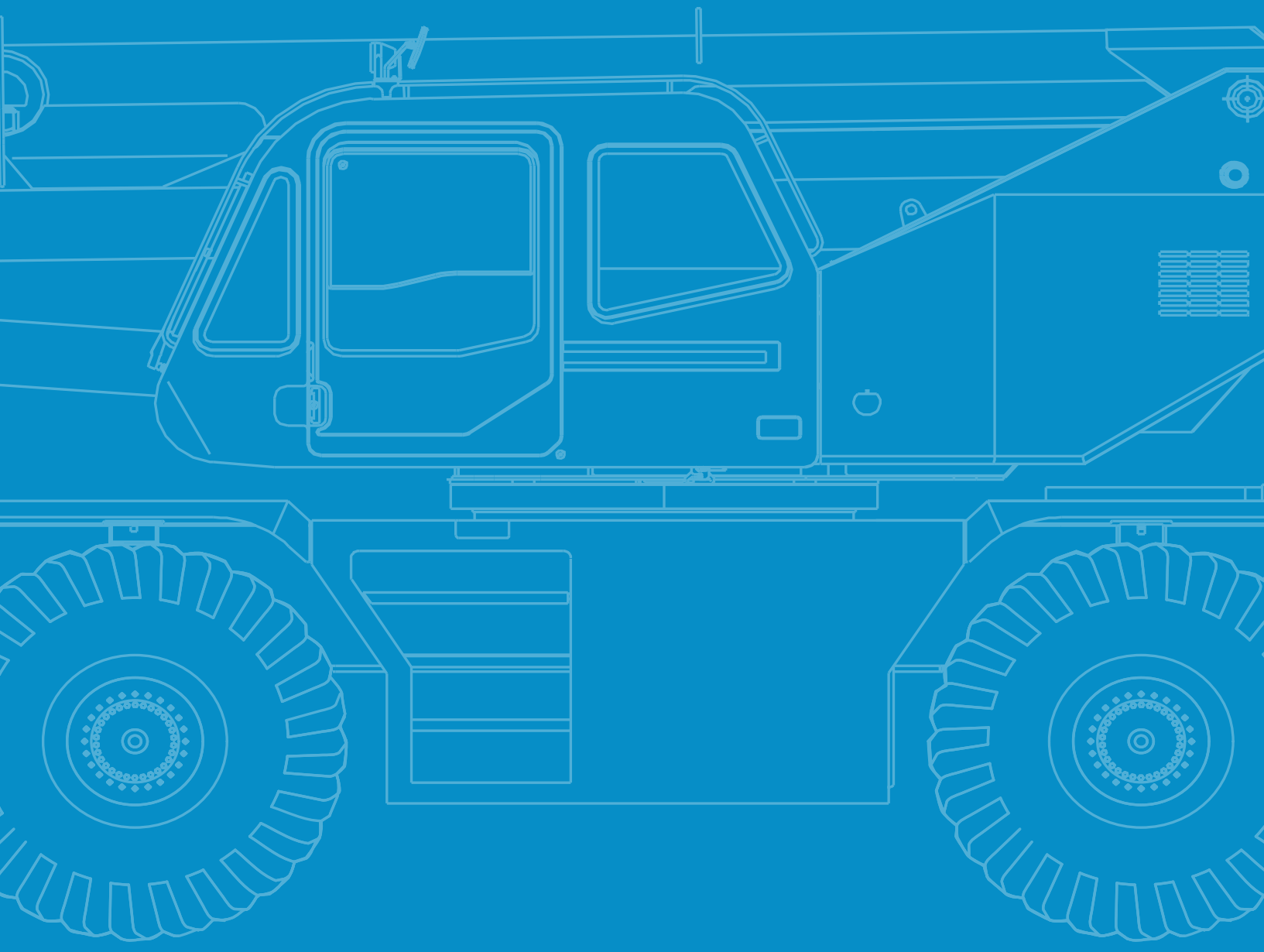

Operation

Main boom			
	approx. 72 s (35.1 ft – 113.9 ft)		-0.8° – 81° approx. 27 s (20° – 60°)

Slewing	
	2.7 min^{-1}

Hoist			
	16,500 lb	3/4“	633‘
	16,500 lb	3/4“	361‘

Operation

Line speeds and pulls

Main or auxiliary hoist - 14‘-1/4“ drum

N 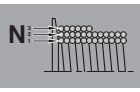	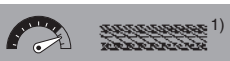 [1]	[2]
1	331 ft/min.	16,500 lb
2	361 ft/min.	15,200 lb
3	390 ft/min.	13,800 lb
4	420 ft/min.	12,700 lb
5	450 ft/min.	11,900 lb
6	479 ft/min.	11,000 lb
7 [3]	509 ft/min.	10,300 lb

Maximum permissible line pull may be affected by wire rope strength. Maximum lifting capacity per line (main + aux.): 12,300 lb.

1) Line speeds based only on hook block, not loaded.
2) Developed by machinery with each layer of wire rope, but not based on rope strength or other limitation in machinery or equipment.
3) Seventh layer of wire rope are not recommended for hoisting operations.

Drum wire rope capacities

Main and auxiliary drum grooved lagging 3/4“ wire rope

N 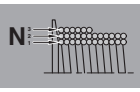		Σ
1	112.2 ft	112.2 ft
2	122.3 ft	234.5 ft
3	132.2 ft	366.8 ft
4	142.3 ft	509.1 ft
5	152.2 ft	661.4 ft
6	162.4 ft	823.8 ft
7	172.5 ft	996.4 ft

Drum dimensions

Root diameter	14-1/4“
Length	23-5/8“
Flange diameter	25-7/8“

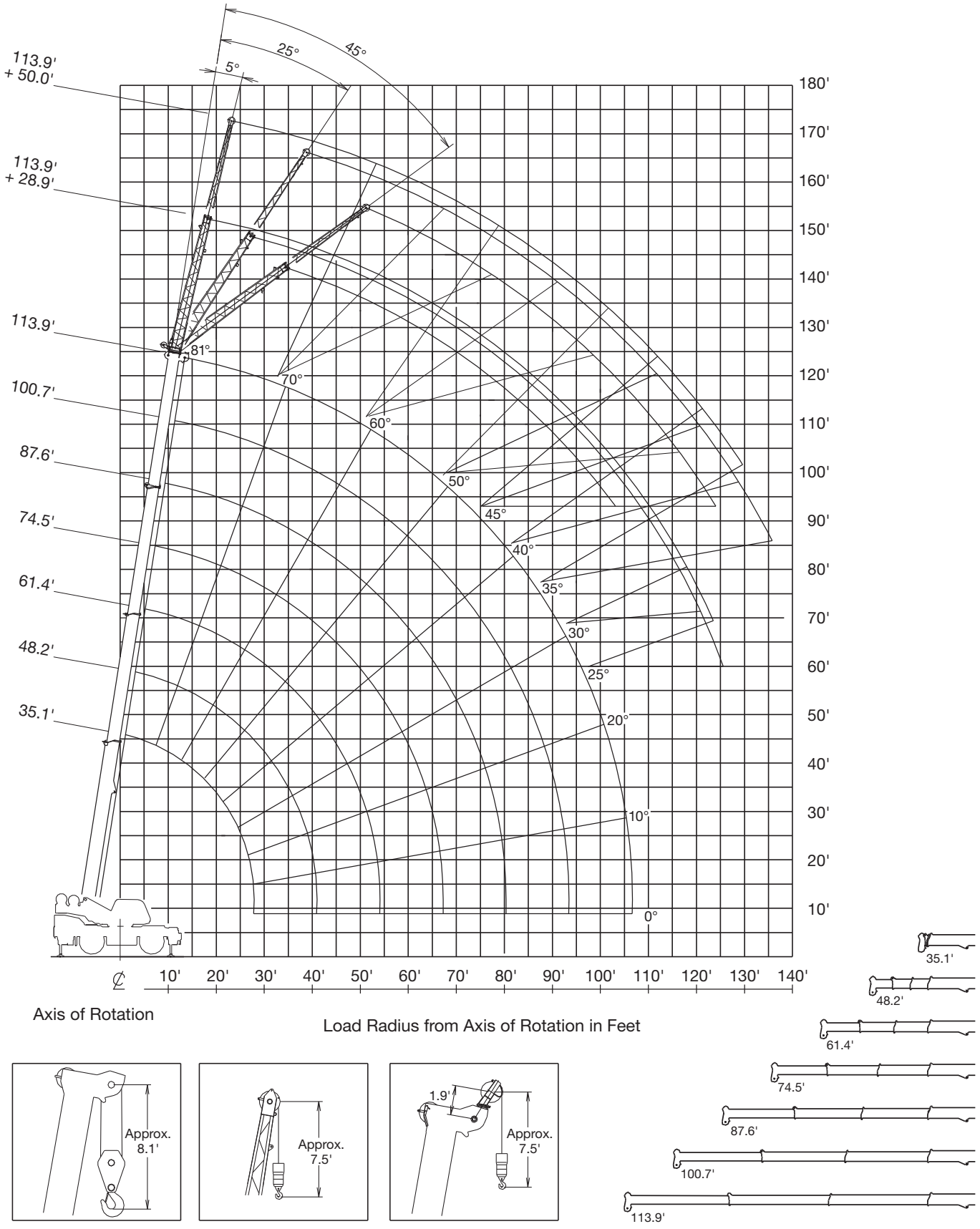

NOTE: Boom and jib geometry shown are for unloaded condition and machine standing level on firm supporting surface. Boom deflection and subsequent radius and boom angle change must be accounted for when applying load to hook.

Fully extended – 360°

	22‘ 11-5/8“ spread														360°		
	35.1‘[1]	35.1‘	48.2‘[1]	48.2‘	61.4‘[1]	61.4‘	74.5‘[1]	74.5‘	87.6‘[1]	87.6‘	100.7‘[1]	100.7‘	113.9‘[1]	113.9‘	
ft							1,000 lb								ft
8	70°	110,000	-	-	-	-	-	-	-	-	-	-	-	-	8
10	66°	100,600	73°	46,700	77°	46,700	80°	44,300	-	-	-	-	-	-	10
12	63°	87,900	70°	46,700	75°	46,700	78°	44,300	81°	41,200	-	-	-	-	12
15	56°	73,400	67°	46,700	72°	46,700	76°	44,300	79°	40,300	81°	33,000	-	-	15
20	44°	54,400	60°	46,700	67°	46,700	72°	42,100	76°	35,800	78°	30,500	80°	25,100	20
25	27°	38,500	52°	43,000	62°	43,000	68°	39,500	72°	31,700	75°	27,300	78°	23,900	25
30	-	-	44°	33,800	56°	35,000	64°	35,500	69°	28,700	72°	25,000	75°	21,600	30
35	-	-	33°	25,600	50°	26,600	59°	27,000	65°	25,300	69°	23,000	72°	19,900	35
40	-	-	16°	20,400	44°	21,100	54°	21,500	61°	21,200	66°	20,500	70°	19,000	40
45	-	-	-	-	36°	17,100	49°	17,300	57°	17,500	63°	17,400	67°	17,100	45
50	-	-	-	-	25°	14,100	43°	14,300	53°	14,500	59°	14,400	64°	14,500	50
55	-	-	-	-	-	-	37°	12,000	48°	12,200	56°	12,100	61°	12,200	55
60	-	-	-	-	-	-	29°	10,200	43°	10,300	52°	10,300	58°	10,350	60
65	-	-	-	-	-	-	18°	8,700	38°	8,750	48°	8,850	54°	8,850	65
70	-	-	-	-	-	-	-	-	32°	7,550	44°	7,600	51°	7,650	70
75	-	-	-	-	-	-	-	-	24°	6,550	39°	6,600	47°	6,650	75
80	-	-	-	-	-	-	-	-	9°	5,700	34°	5,700	44°	5,750	80
85	-	-	-	-	-	-	-	-	-	-	27°	4,950	39°	5,000	85
90	-	-	-	-	-	-	-	-	-	-	19°	4,350	35°	4,350	90
95	-	-	-	-	-	-	-	-	-	-	-	-	30°	3,750	95
100	-	-	-	-	-	-	-	-	-	-	-	-	23°	3,250	100
105	-	-	-	-	-	-	-	-	-	-	-	-	13°	2,350	105
[2]	0°		0°		0°		0°		0°		0°		0°		[2]
	35.1‘		48.2‘		61.4‘		74.5‘		87.6‘		100.7‘		113.9‘		
	27.8‘		41‘		54.1‘		67.3‘		80.2‘		92.7‘		105.4‘		
[1] 0°	16,500 lb		10,600 lb		7,000 lb		4,800 lb		3,300 lb		2,200 lb		1,400 lb		[1] 0°

1) Loaded boom angle (°)

2) Minimum boom angle (°) for indicated length (no load)

NOTE:
The lifting capacity data stored in the LOAD MOMENT INDICATOR (AML-C) is based on the standard number of parts of line listed in the chart. Standard number of parts of line for each boom length should be according to the following table.

	35.1‘	35.1‘ to 61.4‘	61.4‘ to 113.9‘	Single top jib
	10	6	4	1

Mid extended – 360°

	21‘ 3-7/8“ spread																					
	360°																					
	35.1‘ 1)	35.1‘	48.2‘ 1)	48.2‘	61.4‘ 1)	61.4‘	74.5‘ 1)	74.5‘	87.6‘ 1)	87.6‘	100.7‘ 1)	100.7‘	113.9‘ 1)	113.9‘								
ft							1,000 lb															ft
8	70°	110,000	-	-	-	-	-	-	-	-	-	-	-	-								8
10	66°	100,600	73°	46,700	77°	46,700	80°	44,300	-	-	-	-	-	-								10
12	63°	87,900	70°	46,700	75°	46,700	78°	44,300	81°	41,200	-	-	-	-								12
15	56°	73,400	67°	46,700	72°	46,700	76°	44,300	79°	40,300	81°	33,000	-	-								15
20	44°	54,400	60°	46,700	67°	46,700	72°	42,100	76°	35,800	78°	30,500	80°	25,100								20
25	27°	38,500	52°	40,600	62°	41,300	68°	39,500	72°	31,700	75°	27,300	78°	23,900								25
30	-	-	44°	28,300	56°	29,000	64°	29,500	69°	28,700	72°	25,000	75°	21,600								30
35	-	-	33°	21,000	50°	21,600	59°	22,100	65°	22,400	69°	22,500	72°	19,900								35
40	-	-	16°	16,300	43°	17,000	54°	17,300	61°	17,500	66°	17,600	70°	17,700								40
45	-	-	-	-	35°	13,700	49°	14,000	57°	14,100	62°	14,300	67°	14,200								45
50	-	-	-	-	25°	11,100	43°	11,500	53°	11,700	59°	11,800	64°	11,700								50
55	-	-	-	-	-	-	37°	9,500	48°	9,700	55°	9,900	60°	9,800								55
60	-	-	-	-	-	-	29°	8,000	43°	8,200	52°	8,300	57°	8,200								60
65	-	-	-	-	-	-	18°	6,500	38°	7,000	48°	7,000	54°	7,000								65
70	-	-	-	-	-	-	-	-	32°	5,900	43°	5,900	50°	6,000								70
75	-	-	-	-	-	-	-	-	24°	5,000	39°	5,000	47°	5,100								75
80	-	-	-	-	-	-	-	-	9°	4,000	33°	4,300	43°	4,400								80
85	-	-	-	-	-	-	-	-	-	-	27°	3,700	39°	3,700								85
90	-	-	-	-	-	-	-	-	-	-	19°	2,900	35°	3,100								90
95	-	-	-	-	-	-	-	-	-	-	-	-	29°	2,700								95
100	-	-	-	-	-	-	-	-	-	-	-	-	23°	2,200								100
105	-	-	-	-	-	-	-	-	-	-	-	-	12°	1,650								105
2)	0°		0°		0°		0°		0°		0°		0°								2)	
	35.1‘		48.2‘		61.4‘		74.5‘		87.6‘		100.7‘		113.9‘									
	27.8‘		41‘		54.1‘		67.3‘		80.2‘		92.7‘		105.4‘									
1) 0°	16,500 lb		10,600 lb		7,000 lb		4,800 lb		3,300 lb		2,200 lb		1,400 lb								1) 0°	

1) Loaded boom angle (°)

2) Minimum boom angle (°) for indicated length (no load)

NOTE:
The lifting capacity data stored in the LOAD MOMENT INDICATOR (AML-C) is based on the standard number of parts of line listed in the chart. Standard number of parts of line for each boom length should be according to the following table.

35.1‘	35.1‘ to 61.4‘	61.4‘ to 113.9‘	Single top jib
10	6	4	1

Mid extended – 360°

	16‘ 4-7/8“ spread																			
	360°																			
	35.1‘1)	35.1‘	48.2‘1)	48.2‘	61.4‘1)	61.4‘	74.5‘1)	74.5‘	87.6‘1)	87.6‘	100.7‘1)	100.7‘	113.9‘1)	113.9‘	
ft							1,000 lb								ft
8	70°	110,000	-	-	-	-	-	-	-	-	-	-	-	-	8
10	66°	100,600	73°	46,700	77°	46,700	80°	44,300	-	-	-	-	-	-	10
12	63°	87,900	70°	46,700	75°	46,700	78°	44,300	81°	41,200	-	-	-	-	12
15	56°	72,400	67°	46,700	72°	46,700	76°	44,300	79°	40,300	81°	33,000	-	-	15
20	44°	38,500	60°	39,900	67°	40,700	72°	41,400	76°	35,800	78°	30,500	80°	25,100	20
25	27°	24,600	52°	26,000	62°	26,600	68°	27,200	72°	27,500	75°	27,200	78°	23,900	25
30	-	-	44°	18,600	56°	19,000	63°	19,500	68°	19,800	72°	19,900	75°	19,600	30
35	-	-	33°	13,700	50°	14,400	59°	14,800	65°	15,000	69°	15,000	72°	15,100	35
40	-	-	16°	10,400	43°	11,200	54°	11,700	61°	11,900	65°	11,900	69°	11,900	40
45	-	-	-	-	35°	8,800	49°	9,300	57°	9,500	62°	9,500	66°	9,600	45
50	-	-	-	-	25°	7,000	43°	7,500	53°	7,700	59°	7,700	63°	7,800	50
55	-	-	-	-	-	-	37°	6,000	48°	6,150	55°	6,150	60°	6,300	55
60	-	-	-	-	-	-	29°	4,850	43°	5,000	51°	5,000	57°	5,100	60
65	-	-	-	-	-	-	18°	3,700	38°	4,050	47°	4,050	54°	4,150	65
70	-	-	-	-	-	-	-	-	32°	3,300	43°	3,300	50°	3,400	70
75	-	-	-	-	-	-	-	-	24°	2,650	38°	2,700	47°	2,800	75
80	-	-	-	-	-	-	-	-	9°	2,000	33°	2,100	43°	2,200	80
85	-	-	-	-	-	-	-	-	-	-	27°	1,600	39°	1,700	85
90	-	-	-	-	-	-	-	-	-	-	18°	1,050	34°	1,300	90
2)	0°		0°		0°		0°		0°		0°		19°		2)
	35.1‘		48.2‘		61.4‘		74.5‘		87.6‘		100.7‘				
	27.8‘		41‘		54.1‘		67.3‘		80.2‘		92.7‘				
1) 0°	16,500 lb		9,900 lb		5,670 lb		3,480 lb		1,980 lb		900 lb				1) 0°

1) Loaded boom angle (°)

2) Minimum boom angle (°) for indicated length (no load)

NOTE:
The lifting capacity data stored in the LOAD MOMENT INDICATOR (AML-C) is based on the standard number of parts of line listed in the chart. Standard number of parts of line for each boom length should be according to the following table.

	35.1‘	35.1‘ to 61.4‘	61.4‘ to 113.9‘	Single top jib
	10	6	4	1

Min extended – 360°

	8‘ 1-5/8“ spread														360°
	35.1‘[1)]	35.1‘	48.2‘[1)]	48.2‘	61.4‘[1)]	61.4‘	74.5‘[1)]	74.5‘	87.6‘[1)]	87.6‘	100.7‘[1)]	100.7‘	113.9‘[1)]	113.9‘	
ft							1,000 lb								ft
8	70°	75,800	-	-	-	-	-	-	-	-	-	-	-	-	8
10	66°	48,500	73°	46,700	77°	46,700	80°	44,300	-	-	-	-	-	-	10
12	62°	34,100	70°	35,900	75°	35,700	78°	34,900	80°	33,600	-	-	-	-	12
15	56°	22,600	67°	24,100	72°	24,800	76°	24,700	78°	23,900	80°	23,000	-	-	15
20	45°	13,000	60°	14,300	67°	14,900	72°	15,400	75°	15,100	77°	14,600	79°	13,900	20
25	29°	8,050	52°	9,200	62°	9,700	67°	10,200	71°	10,400	74°	10,000	76°	9,500	25
30	-	-	44°	6,100	56°	6,600	63°	7,000	68°	7,200	71°	7,000	74°	6,700	30
35	-	-	33°	3,900	50°	4,400	59°	4,800	64°	5,000	68°	5,000	71°	4,700	35
40	-	-	17°	2,500	43°	2,900	54°	3,300	60°	3,500	65°	3,500	68°	3,300	40
45	-	-	-	-	35°	1,800	49°	2,100	56°	2,300	61°	2,400	65°	2,200	45
50	-	-	-	-	-	-	43°	1,200	52°	1,400	58°	1,500	62°	1,400	50
[2)]	0°		0°		0°		36°		44°		51°		57°		[2)]
	35.1‘		48.2‘												
	27.8‘		41‘												
[1)] 0°	6,040 lb		2,120 lb												[1)] 0°

1) Loaded boom angle (°)

2) Minimum boom angle (°) for indicated length (no load)

NOTE:
The lifting capacity data stored in the LOAD MOMENT INDICATOR (AML-C) is based on the standard number of parts of line listed in the chart. Standard number of parts of line for each boom length should be according to the following table.

	35.1‘	35.1‘ to 61.4‘	61.4‘ to 113.9‘	Single top jib
	10	6	4	1

Notes

Operation

FJ

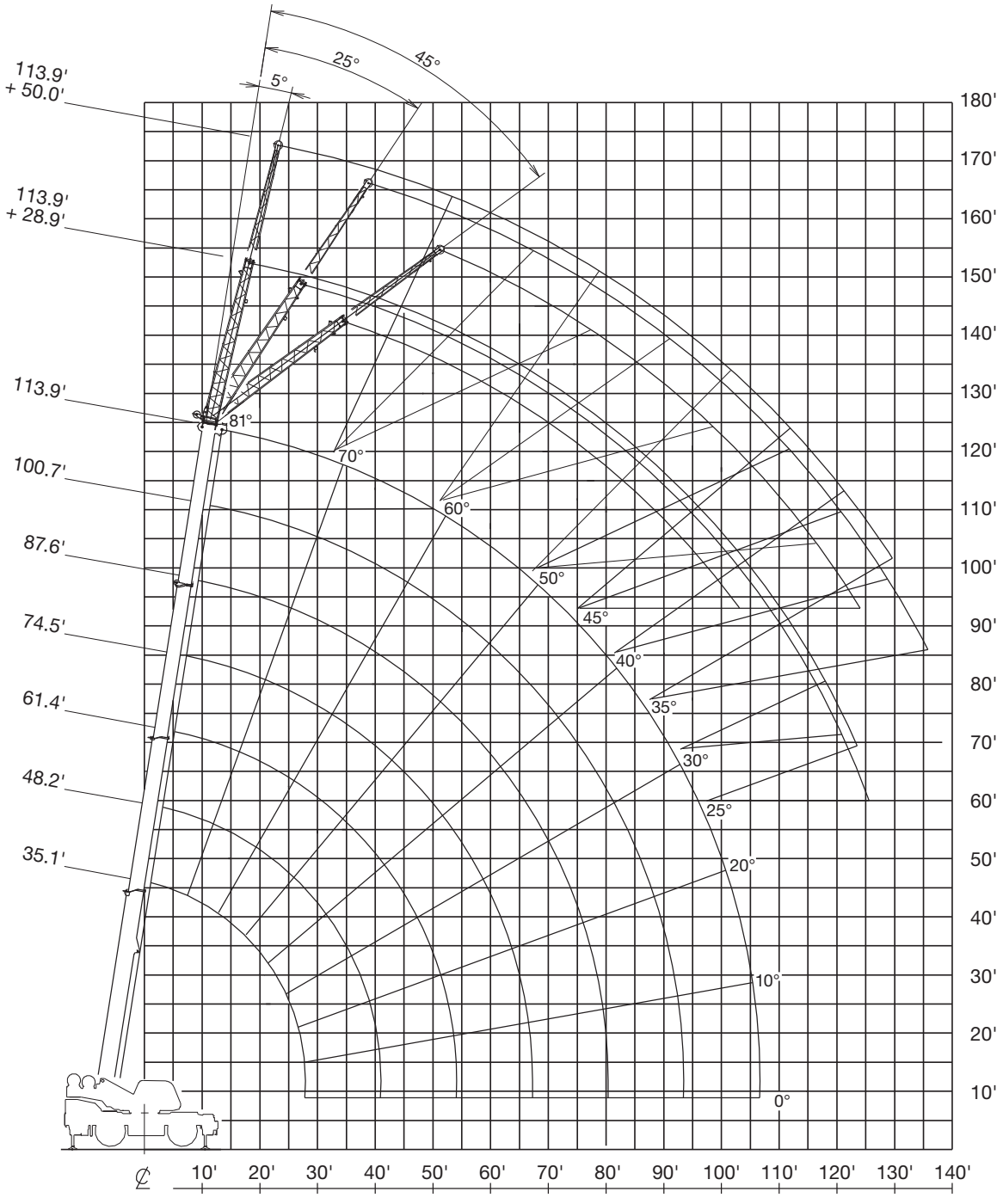

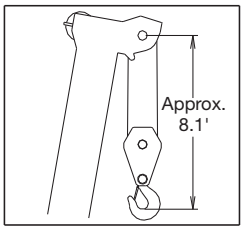

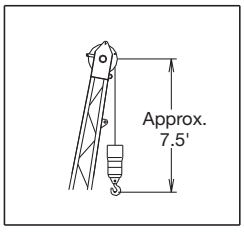

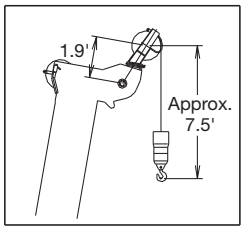

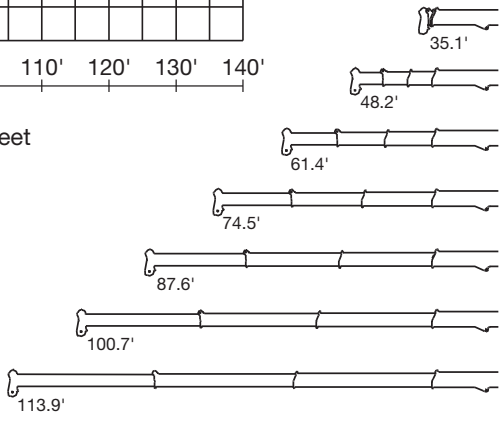

NOTE: Boom and jib geometry shown are for unloaded condition and machine standing level on firm supporting surface. Boom deflection and subsequent radius and boom angle change must be accounted for when applying load to hook.

Fully extended – 360°

22‘ 11-5/8“ spread						
113.9‘ + 28.9‘						
5°			25°		45°	
1)	2)	3)	2)	3)	2)	3)
80°	25.6‘	12,300	34.8‘	8,400	41.5‘	6,050
77.5°	32.9‘	12,000	41.3‘	8,000	47.3‘	5,900
75°	39.8‘	11,500	47.5‘	7,650	53.1‘	5,700
72.5°	46.3‘	10,600	53.6‘	7,350	58.7‘	5,550
70°	52.3‘	9,750	59.5‘	7,100	64.0‘	5,400
67.5°	58.3‘	9,100	65.1‘	6,850	69.2‘	5,300
65°	64.0‘	8,500	70.5‘	6,600	74.0‘	5,200
62.5°	69.4‘	7,900	75.6‘	6,400	78.9‘	5,100
60°	74.8‘	7,400	80.5‘	6,200	83.7‘	5,050
57.5°	79.5‘	6,500	85.5‘	5,700	88.2‘	5,000
55°	84.0‘	5,650	90.0‘	5,200	92.5‘	4,950
52.5°	88.8‘	5,000	94.1‘	4,600	96.2‘	4,450
50°	93.1‘	4,400	98.2‘	4,100	99.7‘	3,950
47.5°	97.4‘	3,950	102.1‘	3,700	103.3‘	3,550
45°	101.4‘	3,500	105.6‘	3,300	106.6‘	3,150
42.5°	105.3‘	3,150	109.1‘	2,950	-	-
40°	109.0‘	2,800	112.3‘	2,650	-	-
37.5°	112.6‘	2,500	115.5‘	2,400	-	-
35°	115.8‘	2,250	118.2‘	2,200	-	-
32.5°	118.7‘	2,050	120.9‘	2,000	-	-
30°	121.6‘	1,850	123.3‘	1,800	-	-
27.5°	124.1‘	1,700	125.3‘	1,650	-	-
25°	126.3‘	1,600	127.1‘	1,550	-	-

360°						
113.9‘ + 50.0‘						
5°			25°		45°	
1)	2)	3)	2)	3)	2)	3)
80°	32.6‘	6,350	47.6‘	4,050	59.0‘	2,750
77.5°	40.8‘	6,200	54.9‘	3,900	65.3‘	2,700
75°	48.6‘	6,050	61.9‘	3,700	71.6‘	2,600
72.5°	56.0‘	5,600	68.5‘	3,550	77.5‘	2,550
70°	63.0‘	5,200	75.0‘	3,350	83.2‘	2,500
67.5°	69.6‘	4,900	81.2‘	3,200	88.7‘	2,450
65°	76.1‘	4,600	87.0‘	3,100	93.9‘	2,400
62.5°	82.2‘	4,350	92.6‘	3,000	98.9‘	2,350
60°	88.4‘	4,150	98.1‘	2,900	103.8‘	2,350
57.5°	94.4‘	3,950	103.6‘	2,800	108.4‘	2,300
55°	100.0‘	3,800	108.7‘	2,700	112.6‘	2,300
52.5°	105.4‘	3,500	113.3‘	2,650	116.7‘	2,250
50°	110.2‘	3,150	117.9‘	2,600	120.3‘	2,250
47.5°	114.8‘	2,750	121.9‘	2,400	124.0‘	2,200
45°	119.3‘	2,400	125.7‘	2,150	127.1‘	2,100
42.5°	123.3‘	2,100	129.3‘	1,900	-	-
40°	127.0‘	1,850	132.7‘	1,700	-	-
37.5°	131.1‘	1,600	135.7‘	1,500	-	-
35°	134.4‘	1,400	138.5‘	1,300	-	-
32.5°	-	-	-	-	-	-
30°	-	-	-	-	-	-
27.5°	-	-	-	-	-	-
25°	-	-	-	-	-	-

1) Loaded boom angle (°)

2) Load radius in feet

3) Rated lifting capacity in pounds

Mid extended – 360°

21‘ 3-7/8“ spread

113.9‘ + 28.9‘						
	5°		25°		45°	
1)	2)	3)	2)	3)	2)	3)
80°	25.6‘	12,300	34.8‘	8,400	41.5‘	6,050
77.5°	32.9‘	12,000	41.3‘	8,000	47.3‘	5,900
75°	39.8‘	11,500	47.5‘	7,650	53.1‘	5,700
72.5°	46.3‘	10,600	53.6‘	7,350	58.7‘	5,550
70°	52.3‘	9,750	59.5‘	7,100	64.0‘	5,450
67.5°	58.1‘	8,800	65.1‘	6,850	69.2‘	5,300
65°	63.5‘	7,900	70.5‘	6,600	74.0‘	5,200
62.5°	68.7‘	6,800	75.3‘	5,800	78.9‘	4,950
60°	73.6‘	5,800	79.9‘	5,050	83.5‘	4,700
57.5°	78.5‘	5,100	84.6‘	4,450	87.8‘	4,250
55°	83.3‘	4,500	89.0‘	3,850	91.8‘	3,850
52.5°	87.9‘	3,900	93.4‘	3,300	95.7‘	3,350
50°	92.5‘	3,300	97.4‘	2,850	99.3‘	2,900
47.5°	96.7‘	2,800	101.4‘	2,450	102.9‘	2,450
45°	100.7‘	2,350	105.0‘	2,100	106.2‘	2,050
42.5°	104.3‘	2,000	108.5‘	1,800	-	-
40°	108.3‘	1,650	111.8‘	1,550	-	-
37.5°	111.7‘	1,400	115.0‘	1,300	-	-
35°	115.1‘	1,200	117.9‘	1,100	-	-

360°

113.9‘ + 50.0‘						
	5°		25°		45°	
1)	2)	3)	2)	3)	2)	3)
80°	32.6‘	6,350	47.6‘	4,050	59.0‘	2,750
77.5°	40.8‘	6,200	54.9‘	3,900	65.3‘	2,700
75°	48.6‘	6,050	61.9‘	3,700	71.6‘	2,600
72.5°	56.0‘	5,600	68.5‘	3,550	77.5‘	2,550
70°	63.0‘	5,200	75.0‘	3,350	83.2‘	2,500
67.5°	69.6‘	4,900	81.2‘	3,200	88.7‘	2,450
65°	76.1‘	4,600	87.0‘	3,100	93.9‘	2,400
62.5°	82.2‘	4,350	92.6‘	3,000	98.9‘	2,350
60°	88.3‘	4,100	98.1‘	2,900	103.8‘	2,350
57.5°	93.8‘	3,550	103.5‘	2,700	108.4‘	2,300
55°	99.0‘	3,000	108.4‘	2,500	112.6‘	2,300
52.5°	104.0‘	2,450	112.9‘	2,150	116.4‘	2,000
50°	108.8‘	2,000	117.1‘	1,800	119.9‘	1,750
47.5°	113.6‘	1,700	121.2‘	1,500	123.4‘	1,450
45°	118.0‘	1,400	124.9‘	1,200	126.4‘	1,150
42.5°	-	-	-	-	-	-
40°	-	-	-	-	-	-
37.5°	-	-	-	-	-	-
35°	-	-	-	-	-	-

16‘ 4-7/8“ spread

113.9‘ + 28.9‘						
	5°		25°		45°	
1)	2)	3)	2)	3)	2)	3)
80°	25.6‘	12,300	34.8‘	8,400	41.5‘	6,050
77.5°	32.9‘	12,000	41.3‘	8,000	47.3‘	5,900
75°	39.8‘	11,500	47.5‘	7,650	53.1‘	5,700
72.5°	45.7‘	9,700	53.4‘	7,000	58.7‘	5,550
70°	51.3‘	7,900	58.9‘	6,300	64.0‘	5,400
67.5°	56.9‘	6,550	64.4‘	5,450	68.9‘	4,850
65°	62.2‘	5,300	69.2‘	4,700	73.4‘	4,350
62.5°	67.3‘	4,300	74.0‘	3,850	78.0‘	3,650
60°	72.3‘	3,400	78.8‘	3,150	82.6‘	3,000
57.5°	77.0‘	2,750	83.4‘	2,550	86.8‘	2,450
55°	81.8‘	2,200	87.9‘	2,000	90.8‘	2,000
52.5°	86.4‘	1,700	92.3‘	1,550	94.8‘	1,550
50°	91.0‘	1,300	96.4‘	1,150	98.5‘	1,200

360°

113.9‘ + 50.0‘						
	5°		25°		45°	
1)	2)	3)	2)	3)	2)	3)
80°	32.6‘	6,350	47.6‘	4,050	58.8‘	2,750
77.5°	40.8‘	6,200	54.9‘	3,900	65.3‘	2,700
75°	48.6‘	6,050	61.9‘	3,700	71.6‘	2,600
72.5°	56.0‘	5,600	68.5‘	3,550	77.5‘	2,550
70°	63.0‘	5,200	75.0‘	3,350	83.2‘	2,500
67.5°	69.1‘	4,500	81.0‘	3,100	88.7‘	2,450
65°	75.1‘	3,800	86.6‘	2,850	93.7‘	2,400
62.5°	90.9‘	3,050	91.9‘	2,400	98.6‘	2,150
60°	86.1‘	2,400	97.1‘	1,950	103.3‘	1,900
57.5°	91.6‘	1,800	102.1‘	1,500	107.5‘	1,500
55°	96.7‘	1,300	106.7‘	1,100	111.6‘	1,100
52.5°	-	-	-	-	-	-
50°	-	-	-	-	-	-

1) Loaded boom angle (°)

2) Load radius in feet

3) Rated lifting capacity in pounds

Notes to Lifting Capacity

GENERAL

1. RATED LIFTING CAPACITIES apply only to the machine as originally manufactured and normally equipped by TADANO LTD. Modifications to the machine or use of optional equipment other than that specified can result in a reduction of capacity.
2. Hydraulic cranes can be hazardous if improperly operated or maintained. Operation and maintenance of this machine must be in compliance with information in the ***Operation and Maintenance Manual*** supplied with the crane. If this manual is missing, order a replacement through the distributor.
3. The operator and other personnel associated with this machine shall fully acquaint themselves with the latest applicable ASME B30.5 safety standards for cranes as mentioned in OSHA CFR29 part 1926.

SET UP

1. Rated lifting capacities on the load chart are the maximum allowable crane capacities. They are based on the machine standing level on firm supporting surface under ideal job conditions. Depending on the nature of the supporting surface, it may be necessary to have structural supports under the outrigger floats or tires to spread the loads to a larger surface.
2. For outrigger operation, outriggers shall be properly extended with tires free of supporting surface before operating crane.

OPERATION

1. Rated lifting capacities have been tested to and meet minimum requirements of SAE J1063-Cantilevered Boom Crane Structures Method of Test.
2. Rated lifting capacities do not exceed 85 % of the tipping load on outriggers fully extended as determined by SAE J765-Crane Stability Test Code. Rated lifting capacities for partially extended outriggers are determined from the formula, rated lifting capacities = (tipping load - 0.1 × tip reaction) / 1.25.
3. Rated lifting capacities above bold lines in the chart are based on crane strength and those below, on its stability. They are based on actual load radius increased by boom deflection.
4. The weight of handling device such as hook blocks, slings, etc., must be considered as part of the load and must be deducted from the lifting capacities.
5. Rated lifting capacities are based on freely suspended loads and make no allowance for such factors as the effect of wind, sudden stopping of loads, supporting surface conditions, inflation of tires, operating speeds, side loads, etc. Side pull on the boom or jib is extremely dangerous.
6. Rated lifting capacities do not account for wind on lifted load or boom. We recommend against working under the condition that the load is out of control due to a strong wind. During boom lift, consider that the rated lifting capacity is reduced by 50% when the wind speed is 20 mph to 27 mph; reduced by 70% when the wind speed is 27mph to 31 mph.If the wind speed is 31 mph or over, stop operation. During jib lift, stop operation if the wind speed is 20 mph.
7. Rated lifting capacities at load radius shall not be exceeded. Do not tip the crane to determine allowable loads.
8. Do not operate at boom lengths, radii, or boom angle, where no capacities are shown. Crane may overturn without any load on the hook.
9. When boom length is between values listed, refer to the rated lifting capacities of the next longer and next shorter booms for the same radius. The lesser of the two rated lifting capacities shall be used.
10. When making lifts at a load radius not shown, use the next longer radius to determine allowable capacity.
11. Load per line should not exceed 12,300 lb for main hoist and auxiliary hoist.
12. Check the actual number of parts of line with LOAD MOMENT INDICATOR (AML-C) before operation. Maximum lifting capacity is restricted by the number of parts of line of LOAD MOMENT INDICATOR (AML-C). Limited capacity is as determined from the formula, single line pull for main hoist 12,300 lb x number of parts of line.
13. The boom angle before loading should be greater to account for deflection. For rated lifting capacities, the loaded boom angle and the load radius is for reference only.
14. The 35.1‘ boom length capacities are based on boom fully retracted. If not fully retracted [less than 48.2‘ boom length], use the rated lifting capacities for the 48.2‘ boom length.
15. Extension or retraction of the boom with loads may be attempted within the limits of the RATED LIFTING CAPACITIES. The ability to telescope loads is limited by hydraulic pressure, boom angle, boom length, crane maintenance, etc.
16. For lifting capacity of single top, reduce the rated lifting capacities of relevant boom according to a weight reductions for auxiliary load handling equipment. Capacities of single top shall not exceed 12,300 lb including main hook.
17. When base jib or top jib or both jib removing, jib state switch select removed.
18. When erecting and stowing jib, be sure to retain it by hand or by other means to prevent its free movement.
19. Use ”ANTI-TWO BLOCK“ disable switch when erecting and stowing jib and when stowing hook block. While the switch is pushed, the hoist does not stop, even when overwind condition occurs.
20. For boom length with 28.9‘ jib, rated lifting capacities are determined by loaded boom angle only in the column headed „113.9‘ boom + 28.9‘ jib“. For boom length with 50‘ jib, rated lifting capacities are determined by loaded boom angle only in the column headed „113.9‘ boom + 50‘ jib“. For angles not shown, use the next lower loaded boom angle to determine allowable capacity.
21. When lifting a load by using jib (aux. hoist) and boom (main hoist) simultaneously, do the following:
    – Enter the operation status as jib operation, not as boom operation.
    – Before starting operation, make sure that mass of load is within rated lifting capacity for jib.

DEFINITIONS

1. Load radius: Horizontal distance from a projection of the axis of rotation to supporting surface before loading to the center of the vertical hoist line or tackle with load applied.
2. Loaded boom angle: The angle between the boom base section and the horizontal, after lifting the rated lifting capacity at the load radius.
3. Working area: Area measured in a circular arc about the centerline of rotation.
4. Freely suspended load: Load hanging free with no direct external force applied except by the hoist line.
5. Side load: Horizontal side force applied to the lifted load either on the ground or in the air.

Warning and Operating Instructions for on Rubber Lifting Capacities

1. Rated lifting capacities on rubber are in pounds and do not exceed 75 % of tipping loads as determined by SAE J765-Crane Stability Test Code.
2. Rated lifting capacities shown in the chart are based on condition that crane is set on firm level surfaces with axle oscillation lockout applied. Those above bold lines are based on tire capacity and those below, on crane stability. They are based on actual load radius increased by tire deformation and boom deflection.
3. If the axle oscillation lockout cylinders contain air, the axle will not be locked completely and rated lifting capacities may not be obtainable. Bleed the cylinders according to the operation safety and maintenance manual.
4. Rated lifting capacities are based on proper tire inflation, capacity and condition. Damaged tires are hazardous to safe operation of crane.
5. Tires shall be inflated to correct air pressure. Tires: 23.5-25 · Air pressure: 65 psi.
6. Over front operation shall be performed within two degrees in front of chassis.
7. On rubber lifting with “jib“ is not permitted. Maximum permissible boom length is 87.6‘.
8. When making lift on rubber stationary, set parking brake.
9. For creep operation, boom must be centered over front of machine, slewing lock engaged, and load restrained from slewing. Travel slowly and keep the lifted load as close to the ground as possible, and especially avoid any abrupt steering, accelerating or braking.
10. Do not operate the crane while carrying the load.
11. Creep is motion for crane not to travel more than 200‘ in any 30 minute period and to travel at the speed of less than 1 mph.
12. For creep operation, choose the drive mode and proper gear according to the road or working condition.

Notes for Load Moment Indicator (AML-C)

1. When operating crane on outriggers:
   - Set „P.T.O.“ switch to ”ON”.
   - Press the outrigger mode select key to register for the outrigger operation. Press the register key, then the outrigger mode indicative symbol changes from flashing to a solid light.
   - Press the lift mode select key to select the lift status that corresponds to the actual boom configuration. Each time the lift mode select key is pressed, the status changes. Press the register key to register the lift status, then the lift indicative symbol changes from flashing to a solid light.
   - When mounting and stowing jib, select the jib set status (the jib state indicative symbol will be flashing).
2. When operating crane on rubber:
   - Set „P.T.O.“ switch to ”ON”.
   - Press the outrigger mode select key. The on-tire mode indicative symbol comes on. Each time the outrigger mode select key is pressed the status changes. Select the creep operation, the on-tire mode indicative symbol flicker.
   - Press the lift mode select key to register the boom or single top lift.

   However, pay attention to the following.
   (1) For stationary operation.
   - The front capacities are attainable only when the over front position symbol comes on. When the boom is more than 2 degrees from centered over front of chassis, 360° capacities are in effect.
   - When a load is lifted in the front position and then swung to the side area, make sure the value of the LOAD MOMENT INDICATOR (AML-C) is below the 360° lifting capacity.

   (2) For creep operation.
   - The creep capacities are attainable only when boom is in the straight forward position of chassis and the over front position symbol is on. If boom is not in the straight forward position of chassis, never lift load.
3. A slewing does not automatically stop even if the crane becomes overloaded.
4. During crane operation, make sure that the displays on front panel are in accordance with actual operating conditions.
5. The displayed values of LOAD MOMENT INDICATOR (AML-C) are based on freely suspended loads and make no allowance for such factors as the effect of wind, sudden stopping of loads, supporting surface conditions, inflation of tire, operating speed, side loads, etc. For safe operation, it is recommended when extending and lowering boom or slewing, lifting loads shall be appropriately reduced.
6. LOAD MOMENT INDICATOR (AML-C) is intended as an aid to the operator. Under no condition should it be relied upon to replace use of capacity charts and operating instruction. Sole reliance upon LOAD MOMENT INDICATOR (AML-C) aids in place of good operating practice can cause an accident. The operator must exercise caution to assure safety.

TECHNICAL DESCRIPTION

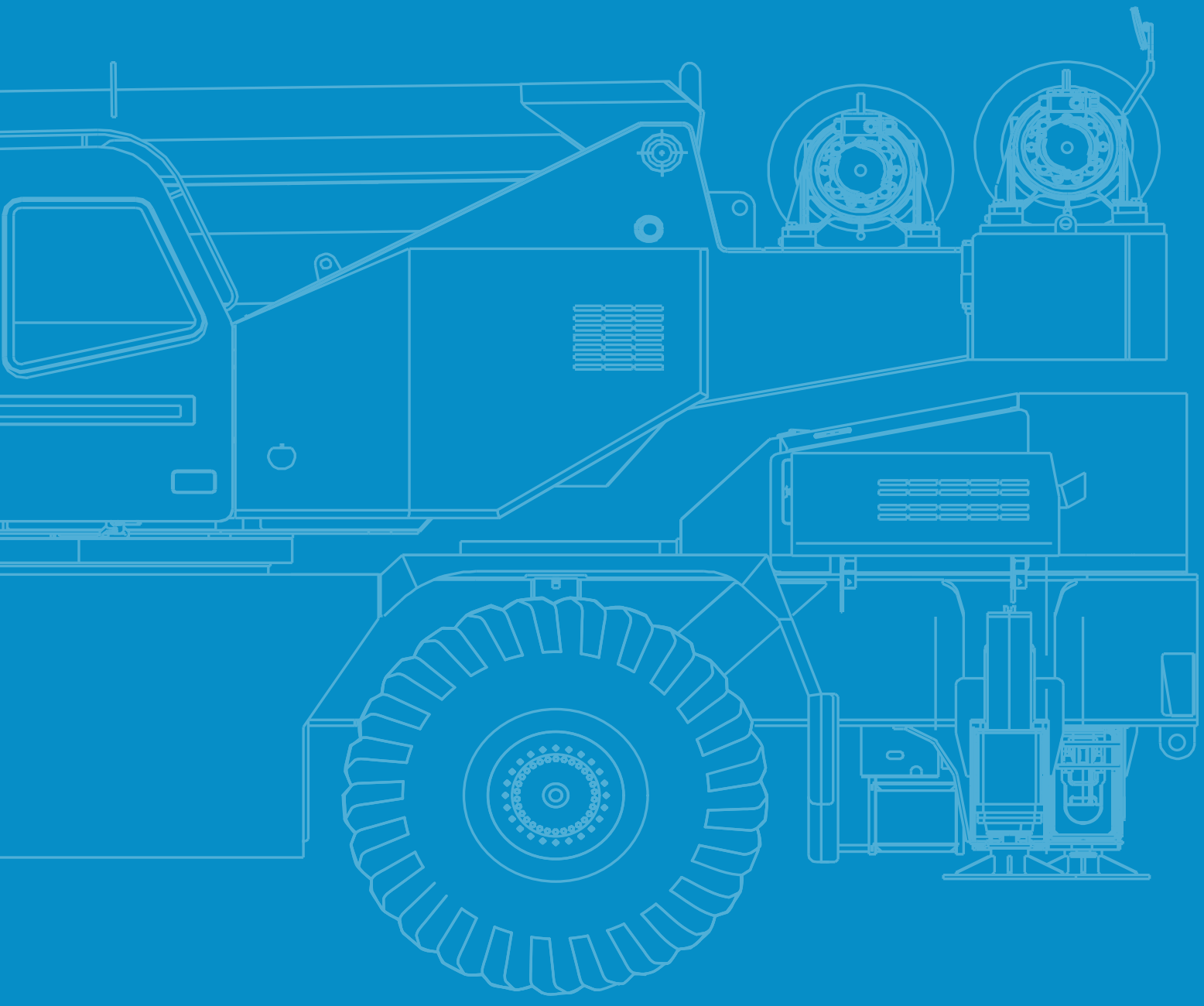

Technical Description

Crane specifications

Boom	Four section full power synchronized telescoping boom, 35.1‘ - 113.9‘, of round box construction with four sheaves, 17-5/16“ root diameter, at boom head. The synchronization system consists of telescope cylinder, two extension cables and retraction cables. Hydraulic cylinder fitted with holding valve. Two easily removable wire rope guards, rope dead end provided on both sides of boom head. Boom telescope sections are supported by wear pads both vertically and horizontally. Extension speed 78.8‘ in 72 seconds.
Boom elevation	By a double acting hydraulic cylinder with holding valve. Elevation -0.8° - 81°, combination controls for hand or foot operation. Boom angle indicator. Automatic speed reduction and soft stop function. Boom raising speed 20° - 60° in 27 sec.
Jib	Two stage bi-fold lattice type with 5°, 25° or 45° offset (tilt type). Single sheave, 15-5/8“ root diameter, at the head of both jib sections. Stored alongside base boom section. Jib length is 28.9‘ or 50‘. Assistant cylinders for mounting and stowing, controlled at right side of superstructure. Self stowing jib mounting pins.
Auxiliary lifting sheave (single top)	Single sheave, 15-5/8“ root diameter. Mounted to main boom head for single line work (storable).
Anti-two block	Pendant type over-winding cut out device with audio-visual (FAILURE lamp/BUZZER) warning system.
Slewing	Hydraulic axial piston motor through planetary slewing speed reducer. Continuous 360° full circle slewing on ball bearing turn table at 2.7 min^{-1} {rpm}. Equipped with manually locked/released slewing brake. A 360° positive slewing lock for pick and carry and travel modes, manually engaged in cab. Twin slewing system: Free slewing or lock slewing controlled by selector switch on front console.
Hoist	MAIN HOIST: Variable speed type with grooved drum driven by hydraulic axial piston motor through speed reducer. Power load lowering and raising. Equipped with automatic brake (neutral brake) and counterbalance valve. Controlled independently of auxiliary hoist. Equipped with cable follower and drum rotation indicator. DRUM: Grooved 14-1/4“ root diameter x 23-5/8“ wide. Wire rope: 633‘ of 3/4“ diameter rope. Drum capacity: 997‘ 7 layers. Maximum line pull (available): 16,500 lb. Maximum line speed: 450 fpm at the 5th layer. AUXILIARY HOIST: Variable speed type with grooved drum driven by hydraulic axial piston motor through speed reducer. Power load lowering and raising. Equipped with automatic brake (neutral brake) and counterbalance valve. Controlled independently of main hoist. Equipped with cable follower and drum rotation indicator. DRUM: Grooved 14-1/4“ root diameter x 23-5/8“ wide. Wire rope: 361‘ of 3/4“ diameter rope. Drum capacity: 997‘ 7 layers. Maximum line pull (available): 16,500 lb. Maximum line speed: 390 fpm at the 3rd layer. WIRE ROPE: Warrington seal wire, extra improved plow steel, preformed, independent wire rope core, right regular lay. 3/4“ 6 x 31 class breaking strength (main and aux.): 54,700 lb.
Hook blocks	55 ton - 5 sheaves with swivel hook block and safety latch. 6.2 ton - Weighted hook ball with swivel and safety latch.
Hydraulic system	PUMPS: Two variable piston pumps for crane functions. Tandem gear pump for steering, slewing and optional equipment. Powered by carrier engine. Pump disconnect for crane is engaged/disengaged by rotary switch from operator‘s cab. CONTROL VALVES: Multiple valves actuated by pilot pressure with integral pressure relief valves. RESERVOIR: 148 gallons capacity. External sight level gauge. FILTRATION: BETA10 = 10 return filter, full flow with bypass protection, located inside of hydraulic reservoir. Accessible for easy replacement. OIL COOLER: Air cooled fan type.
Cab and controls	Both crane and drive operations can be performed from one cab mounted on rotating superstructure. Left side, 1 man type, steel construction with sliding door access and safety glass windows opening at side. Door window is powered control. Windshield glass window and roof glass window are shatter-resistant. Tilt-telescoping steering wheel. Adjustable control lever stands for slewing, boom elevating, boom telescoping, auxiliary hoist and main hoist. Control lever stands can change neutral positions and tilt for easy access to cab. 3 way adjustable operator‘s seat with high back, headrest and armrest. Engine throttle knob. Foot operated controls: boom elevating, boom telescoping, service brake and engine throttle. Hot water cab heater and air conditioning. Dash-mounted engine start/stop, monitor lamps, cigarette lighter, drive selector switch, parking brake switch, steering mode select switch, power window switch, pump engaged/disengaged switch, slewing brake switch, telescoping/auxiliary hoist select switch, outrigger controls, free slewing / lock slewing selector switch, eco mode switch and ashtray. Instruments: Torque converter oil temperature, engine water temperature, air pressure, fuel, speedometer, tachometer, hour meter and odometer/tripmeter. Hydraulic oil pressure is monitored and displayed on the AML-C display panel.

Technical Description

Crane specifications

Tadano electronic LOAD MOMENT INDICATOR system (AML-C) including:
Control lever lockout function. Boom position indicator. Outrigger state indicator. Boom angle / boom length / jib offset angle / jib length / load adius / rated lifting capacities / actual loads read out. Ratio of actual load moment to rated load moment indication. Automatic speed reduction and slow stop function on boom elevation and slewing. Working condition register switch. Load radius / boom angle / tip height / slewing range preset function. External warning lamp. Tare function. Fuel consumption monitor. Main hoist / auxiliary hoist select. Drum rotation indicator (audible and visible type) main and auxiliary hoist.

TADANO AML-C monitors outrigger extended length and automatically programs the corresponding "RATED LIFTING CAPACITIES" table.

Operator's right hand console includes transmission gear selector, and slewing lock lever and sight level bubble. Upper console includes working light switch, roof washer and wiper switch, emergency outrigger set up key switch, jib equipped/removed select switch, eco mode switch and air conditioning control switch.

NOTE: Each crane motion speed is based on unloaded conditions.

Carrier specifications

Type	Rear engine, left hand steering, driving axle 2-way selected type by manual switch, 4 x 2 front drive, 4 x 4 front and rear drive.
Frame	High tensile steel, all welded mono-box construction.
Engine	Model: Cummins QSB6.7 [Tier 4] · Type: Direct injection diesel · No. of cylinders: 6 · Combustion: 4 cycle, turbo charged and after cooled · Bore x stroke: 4.212 in. x 4.882 in. · Displacement: 409 cu. in liters · Air inlet heater: 24 volt preheat · Air cleaner: Dry type, replaceable element · Oil filter: Full flow with replaceable element · Fuel filter: Full flow with replaceable element · Fuel tank: 79.2 gallons, right side of carrier · Cooling: Liquid pressurized, recirculating by-pass · Radiator: Fin and tube core, thermostat controlled · Fan: Suction type, 9-blade, 28 in. diameter · Starting: 24 volt · Charging: 24 volt system, negative ground · Battery: 2-120 amp. hour · Compressor, air: 17.0 cfm@ 2,400 rpm · Output, max.: Gross 270 HP (201 kW)@2,000 rpm · Torque, max.: 730 ft-lb (990 Nm)@1,500 rpm · Capacity: Cooling water 7.4 gallons, lubrication 4.0 gallons, fuel 79.2 gallons, DEF 10.0 gallons.
Transmission	Electronically controlled full automatic transmission. Torque converter driving full powershift with driving axle selector. 6 forward and 2 reverse speeds, constant mesh. 4 speeds - high range - 2 wheel drive; 4 wheel drive. 4 speeds - low range - 4 wheel drive.
Travel speed	31 mph.
Gradeability	69% (at stall), 57% (machine should be operated within the limit of engine design (30°: Cummins B6.7).
Axle	Front: Full floating type, steering and driving axle with planetary reduction. Rear: Full floating type, steering and driving axle with planetary reduction and non-spin rear differential.
Steering	Hydraulic power steering controlled by steering wheel. Three steering modes available: 2 wheel front, 4 wheelcoordinated and 4 wheel crab.
Suspension	Front: Semi-elliptic leaf springs with hydraulic lockout device. Rear: Semi-elliptic leaf springs with hydraulic lockout device.
Brake systems	Service: Air over hydraulic disc brakes on all 4 wheels. Parking/Emergency: Spring applied-air released brake acting on input shaft of front axle. Auxiliary: Electro-pneumatic operated exhaust brake.
Tires	23.5-25 (OR).
Outriggers	Four hydraulic, beam and jack outriggers. Vertical jack cylinders equipped with integral holding valve. Each outrigger beam and jack is controlled independently from cab. Beams extend to 22' 11-5/8" center-line and retract to within 9' 9-3/8" overall width with floats. Outrigger jack floats are attached thus eliminating the need of manually attaching and detaching them. Controls and sight bubble located in superstructure cab. Four outrigger extension lengths are provided with corresponding „RATED LIFTING CAPACITIES" for crane duty in confined areas. Min. extension: 8' 1-5/8" center to center Mid. extension: 16' 4-7/8" center to center Mid. extension: 21' 3-7/8" center to center Max. extension: 22' 11-5/8" center to center Float size (diameter): 1' 7-11/16"

Technical Description

Standard equipment

Four section full power synchronized boom	35.1‘ - 113.9‘.
Bi-fold lattice jib (tilt type)	28.9‘ or 50‘ – with 5°, 25° or 45° pinned offsets and self storing pins.
Auxiliary lifting sheave	Single top, stowable.
Variable speed main hoist	With grooved drum, cable follower and 633‘ of 3/4“ cable.
Variable speed auxiliary hoist	With grooved drum, cable follower and 361‘ of 3/4“ cable.
Drum rotation indicator	Audible, visible and thumper type – main and auxiliary hoist.
Anti-two block device	Overwind cutout.
Boom angle indicator	
Tadano electronic load moment indicator system (AML-C)	
Outrigger extension length detector	
Electronic crane monitoring system	
Tadano twin slewing system and 360° positive slewing lock	
Self centering finger control levers	With pilot control.
Control pedals	For boom elevating and boom telescoping.
3 way adjustable cloth seat	With armrests, high back and seat belt.
Tilt-telescoping steering wheel	
Tinted safety glass and sun visor	
Front windshield wiper and washer	
Roof window wiper and washer	
Power window	Cab door.
Rear view mirrors	Right and left side.
Mirror for main and auxiliary hoists	
Cigarette lighter and ashtray	
Cab floor mat	
Pump disconnect	In operator‘s cab.
Hydraulic oil cooler	
Hot water cab heater and air conditioner	
Positive control	
Quick reeving type bi-fold jib	
Work lights	
Independently controlled outriggers	
Four outrigger extension positions	

Technical Description

Standard equipment

Self-storing outrigger pads	
Engine	Cummins QSB6.7 turbo charged after cooled engine (270 HP) with exhaust brake.
Electronic controlled automatic transmission driven by torque converter	
Drive / steer	4 x 4 x 4.
Non-spin rear differential	
Semi-elliptic leaf springs suspension	With hydraulic lockout device (front and rear).
Tires	23.5-25 (OR).
Disc brakes	
Fenders	
Air dryer	
Water separator	With filter (high filtration).
Engine over-run alarm	
Back-up alarm	
Low oil pressure / high water temp. warning device	Visual.
Rear steer centering light	
Air cleaner dust indicator	
Full instrumentation package	
Complete highway light package	
Tool storage compartment	
Tire inflation kit	
Electric system	24 volt.
Hook block	55 ton - 5 sheaves with swivel and safety latch for 3/4“ wire rope.
Hook ball	6.2 ton with swivel.
Towing hooks	Front and rear.
Lifting eyes	
Hook block tie down	Front bumper.
Weighted hook storage compartment	
Halogen head lamp	
Telematics	Machine data logging and monitoring system with HELLO-NET via internet.
Fuel consumption monitor	
Eco mode system	

Notes

Notes

tac.sales@tadano.com
www.tadano.com

Tadano Ltd.
Kanda Square 18th Floor, 2-2-1 Kanda-Nishikicho, Chiyoda-ku, Tokyo 101-0054, Japan
Phone: +81-3-6811-7309 (International Division)

Tadano America Corporation
4242 West Greens Road, Houston, TX 77066
Phone: +1 (281) 869-00300 · Fax: +1 (281) 869-0040

Reaching new heights

TADANO